InVid Tech
Innovative Video Technology



PAR-P8TXIR180BNH-AIRBTJB

8 Megapixel IP Plug & Play, Outdoor Turret, 180° Panoramic View with 2 Stitched Fixed Lenses, True AI with 2nd Level Metadata, IR, AI-Triggered: White, Red/Blue & Siren, Dual Built-in Mics & Speaker, SD Card Slot, 12VDC/PoE, Black Housing with Included Junction Box

KEY FEATURES

- 180° Panoramic View with 2 Stitched Fixed Lenses
- True AI Human & Vehicle Classification for Line Crossing, Intrusion Detection, & Other AI Features
- Supports 2nd Level Metadata
- AI-Triggered Red/Blue Flashing Deterrent Light and/or Siren
- AI-Triggered White Light up to 65'

CORE FEATURES

- 8 Megapixel / 4K
- Fixed 2.8mm
- Cloud Upgradeable
- True P2P Connectivity with QR Code Connect NAT 2.0
- Micro SD Slot: Up to 256GB
- Dual Built-in Mics & Speaker with External Audio Input & Output
- True Day/Night with IR Range up to 98'
- IP66 Weatherproof
- ONVIF
- Supports Native Chrome/Edge Use
- Black Housing with Included Junction Box
- 12VDC/PoE Operation
- Free iOS & Android Apps for Smart Phones & Tablets
- Free Central Management Software (CMS) for PC/MAC
- NDAA Compliant

Model	PAR-P8TXIR180BNH-AIRBTJB
Camera	
Image Sensor	1 / 2.7 " Progressive Scan CMOS × 2
Max. Resolution	4640×1760
Electronic Shutter	1 / 3 s ~ 1 / 100000 s
Iris Type	Fixed Iris
Min. Illumination	0.0032 lux@F1.6, AGC ON; 0 lux with LED ON
Lens	2.8mm @F1.6
Field of View	Horizontal: 180°; Vertical:66°
Lens Mount	M12
Day & Night	Auto
Wide Dynamic Range	Digital WDR
BLC	Yes
HLC	Yes
Defog	Yes
S/N Ratio	≥50dB
Digital NR	3D DNR
Angle Adjustment	Pan: 0°~360°; Tilt:0°~75°;Rotation: 0°~360°
Image	
Video Compression	Main stream: H.265+ / H.265 / H.264+ / H.264 Sub stream: H.265+ / H.265 / H.264+ / H.264 / MJPEG Third stream: H.265+ / H.265 / H.264+ / H.264 / MJPEG
H.264 Compression Standard	Baseline Profile/Main Profile/High Profile
Resolution	8MP (4640×1760), 6MP(3632×1632), 4MP(3200×1200), 2MP (2304×864), 2048×768, 1600×608, 1200×448, 960×368, 640×240
Main Stream	8MP/6MP/4MP/2MP(60Hz : 1~30fps; 50Hz : 1~25fps)
Sub Stream	2048×768/1600×608/1200×448(60Hz:1 ~ 30fps; 50Hz: 1 ~ 25fps)
Third Stream	1200×448/960×368/640×240(60Hz:1 ~ 30fps; 50Hz: 1 ~ 25fps)
Bit Rate	64 Kbps ~10Mbps
Bit Rate Type	VBR / CBR
Audio Compression	G711A / U
Image Settings	ROI, Saturation, Brightness, Hue, Contrast, Wide Dynamic, Sharpness, NR, etc. adjustable through client software or web browser
ROI	Each ROI to be configured separately
Interfaces	
Network	RJ 45 10M/100M self - adaptive Ethernet port
Video Output	No
Audio	1CH audio input; 1CH audio output; 1CH built-in speaker; 2CH built-in MICs
Storage	Built-in micro SD card slot; up to 256GB
Reset	Yes
Alarm	1CH alarm input; 1CH alarm output
Intelligent Analytics	
Intelligent Video Detection (IVD)	Line crossing, region intrusion/entrance/exiting (human/vehicle classification), loitering detection, illegal parking detection, abandoned/missing object detection
Statistics	Target counting by line/area, heat map
Exception Detection	Scene change, video blur and abnormal color detection, audio exception
Face Detection	Face detection and face capture
Video Metadata	Simultaneously captures human body, motor vehicle and non-motor vehicle and extracts 13 human features, 4 motor vehicle features and 1 non-motor vehicle feature
DORI Distance	

Lens	Detect	Observe	Recognize	Identify
2.8mm	178 ft (54 m)	71 ft (22 m)	36 ft (11 m)	18 ft (5 m)

Functions	
Remote Monitoring	Web Browser, NVR, Paramount CMS, Paramount CMS App
Web Browser	Chrome 105.0+/Edge 105.0+/Firefox 121.0+/Safari 14.0+
Online Connection	Support simultaneous monitoring for up to 10 users; Support multi-stream real time transmission
Network Protocol	UDP, IPv4, IPv6, DHCP, NTP, RTSP, RTP, RTMP, RTCP, PPPoE, DDNS, SMTP, FTP, SNMP, HTTP, HTTP POST/GET, 802.1x, UPnP, HTTPS, NAT, QoS
Interface Protocol	ONVIF (G/S/T/M)
API&SDK	Yes
Storage	Network remote storage; micro SD card storage
Smart Alarm	Motion detection, SMD, SD card error, SD card full, IP address conflict, Network disconnection, sensor alarm, audio alarm, light alarm
General Function	Watermark, video mask, heartbeat, smart supplement light, ANR, cloud upgrade, disarming
Security	Video encryption, firmware encryption, HTTPS encryption, configuration encryption, illegal login lock, IP address filtering, 802.1x authentication, basic and token authentication for HTTP/RTSP/API
PoE	Yes , IEEE802.3af
Supplement Light Range	IR Range: up to 98.4 ft (30 m); White light range: up to 65.6 ft (20 m)
Ingress Protection	IP66
Others	
Power Supply	DC12V/PoE
Power Consumption	PoE: max. 10.2W; DC12V: max. 9W
Storage Conditions	-22 °F ~ 149 °F (-30 °C ~ 65 °C), Humidity: less than 95 % (non-condensing)
Operating Conditions	-22 °F ~ 140 °F (-30 °C ~ 60 °C), Humidity: less than 95 % (non-condensing)
Dimensions	Ø4.4 in × 4.0 in (Ø111.5 mm × 102.2 mm)
Weight (net)	Approx. 1.6 lb (0.719 kg)
Material	Aluminum alloy body
Installation	Ceiling mounting; Wall mounting
Certificate	CE, FCC
Environmental Protection	Directive EU RoHS, WEEE(2012/19/EU) , directive 94/62/EC and REACH(EC1907/2006)

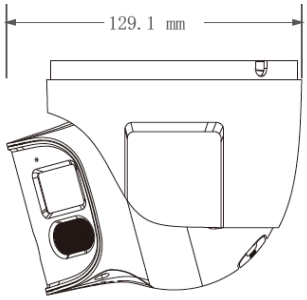

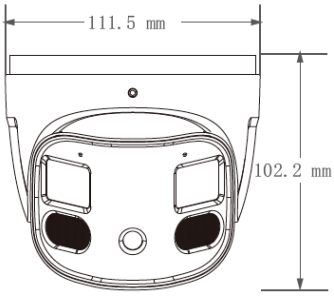

Ordering Information

PAR-P8TXIR180BNH-AIRBTJB: 8 Megapixel Turret, 180 Degree View

InVid Tech, reserves the right to make changes to improve our products at any time without notice; we are not responsible for misprints.

Innovative Video Technology 5 Adams Avenue, Hauppauge, NY 11788 | 631-388-5700 | sales@invidtech.com | www.invidtech.com

PARAMONT